Round 2 - Friday, February 26th, 2021

SHOTLINK

Puerto Rico Open

1
Green Depth **35**

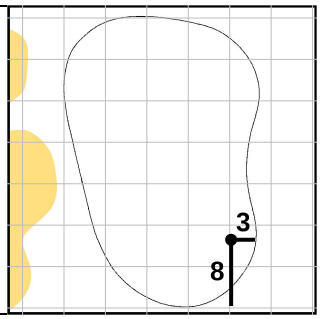

2
Green Depth **23**

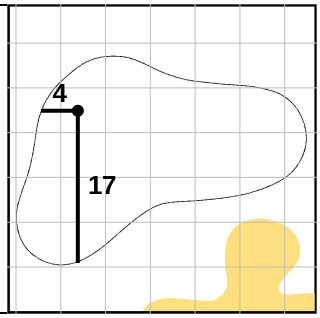

3
Green Depth **29**

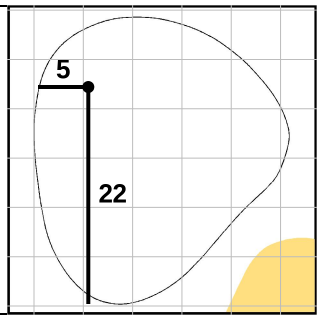

4
Green Depth **34**

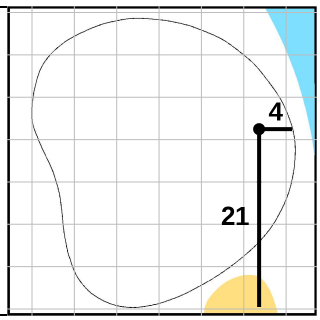

5
Green Depth **37**

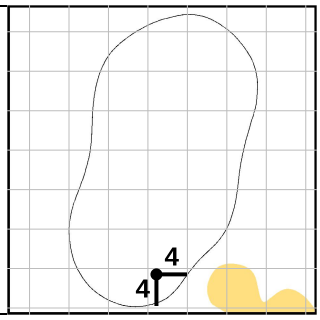

6
Green Depth **34**

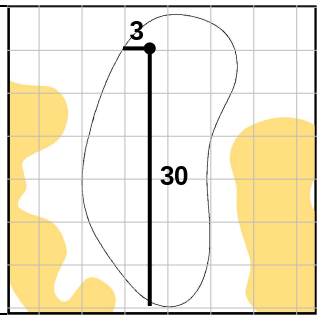

7
Green Depth **38**

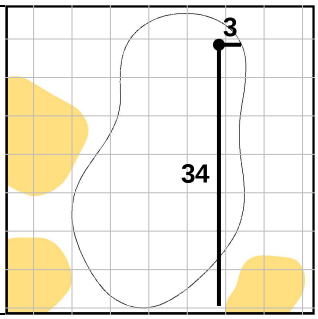

8
Green Depth **29**

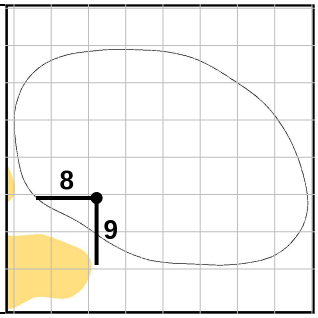

9
Green Depth **30**

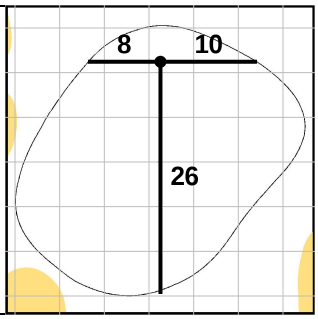

10
Green Depth **29**

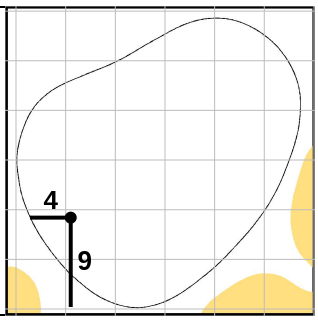

11
Green Depth **39**

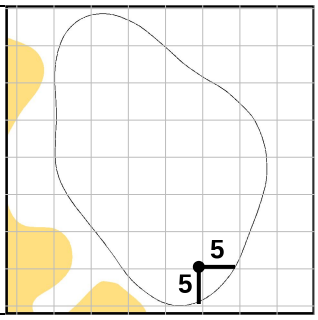

12
Green Depth **30**

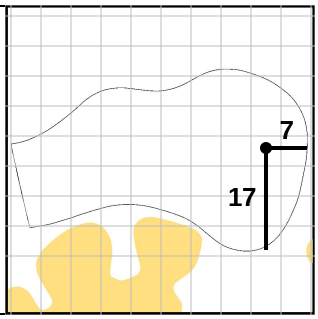

Grand Reserve Country Club

13
Green Depth **31**

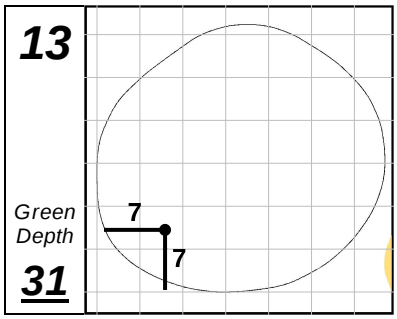

14
Green Depth **26**

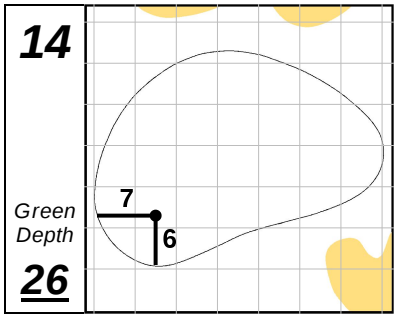

15
Green Depth **23**

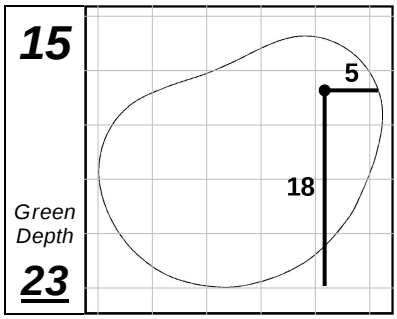

16
Green Depth **33**

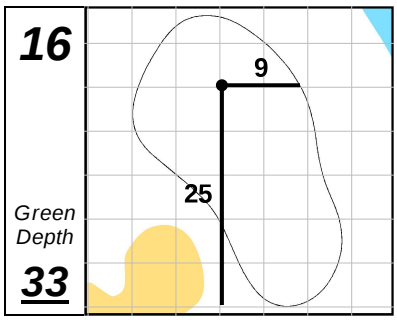

17
Green Depth **31**

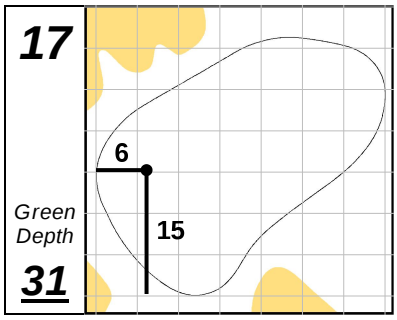

18
Green Depth **29**

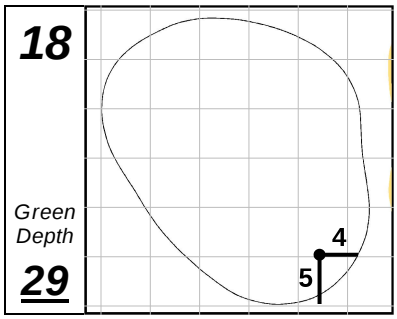

Each side of a complete square on the green represents 5 YARDS.

Thursday, February 25, 2021 1:45 PM